SYM	ECN NO	DATE	APPRPVAL
△			

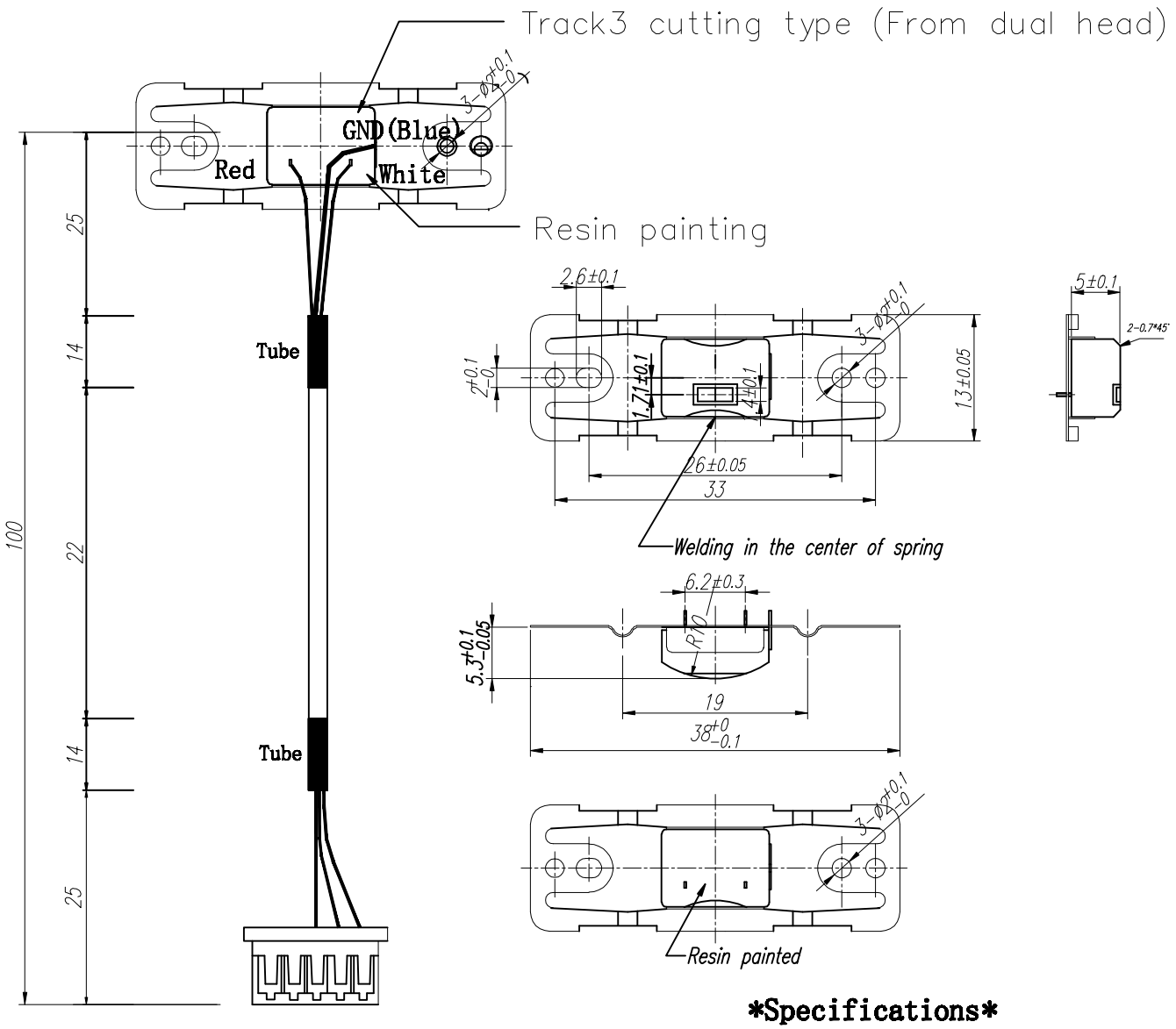

X X Blue White Red

Molex 51021-0500

Specifications

Inductance:28mH± 30%

DC Resistance:140Ω ±25%

core material:permalloy

Welding height: 5/5.3mm

Spring thickness : 0.15mm

Cable : AWG32 2P shield cable

MATERIAL		Q'TY	1	FINISH		BARREL	
TOLERANCE	X.X = ±0.1 X.XX = ±0.05 ANGLE =		SCALE	2/1	MM	REV	A
			DATE				

DWG	DGN	CHK	APP
ZHC			

TITLE	1 TRK READ HEAD (ISO 2)
MODEL	JS 1020-100
DWG. NO	02311502

JINSUNG DIGITECH